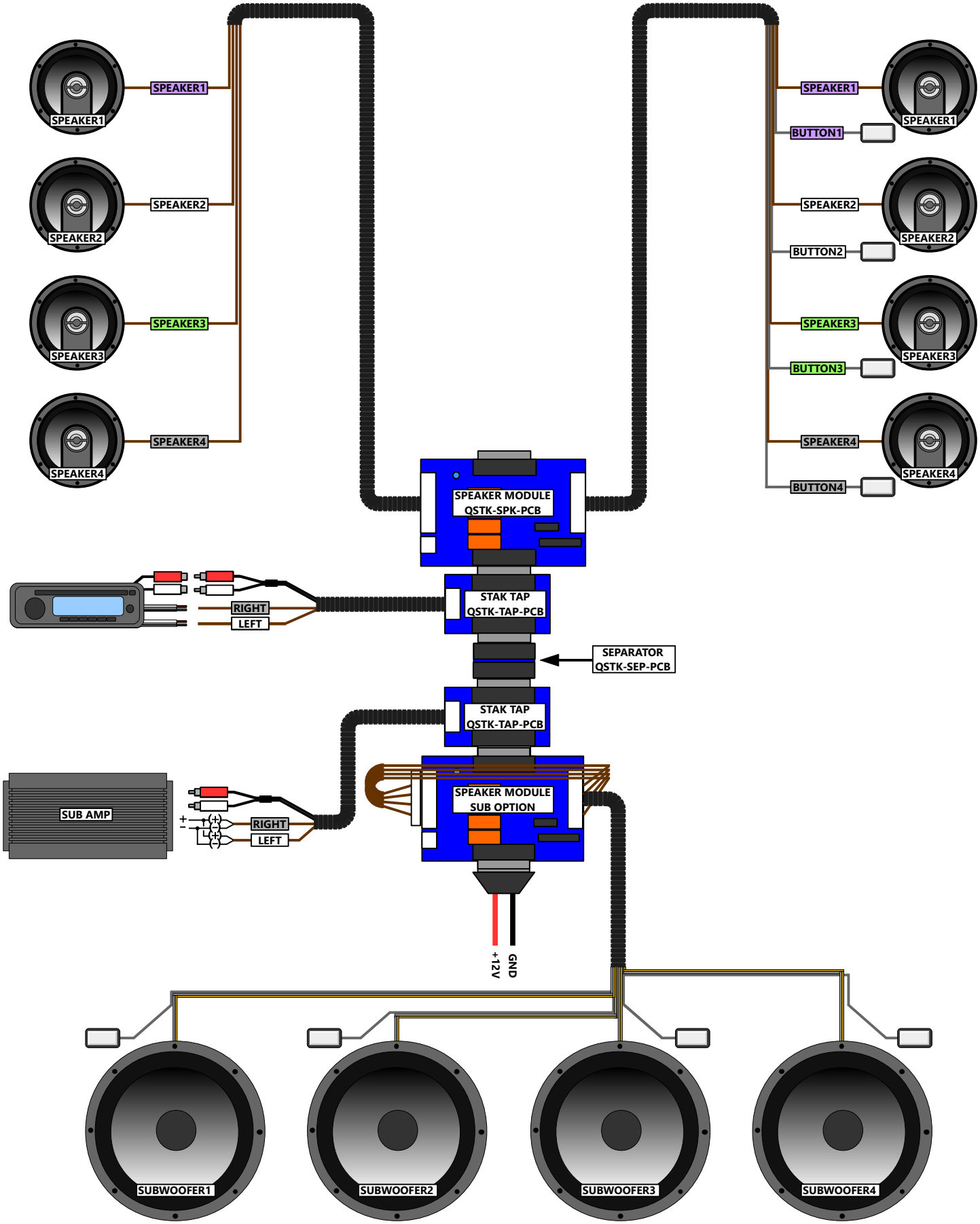

AudioStak INTERACTIVE

4-SPEAKER 4-SUB WOOFER DISPLAY QUICKSTAK WIRING DIAGRAM