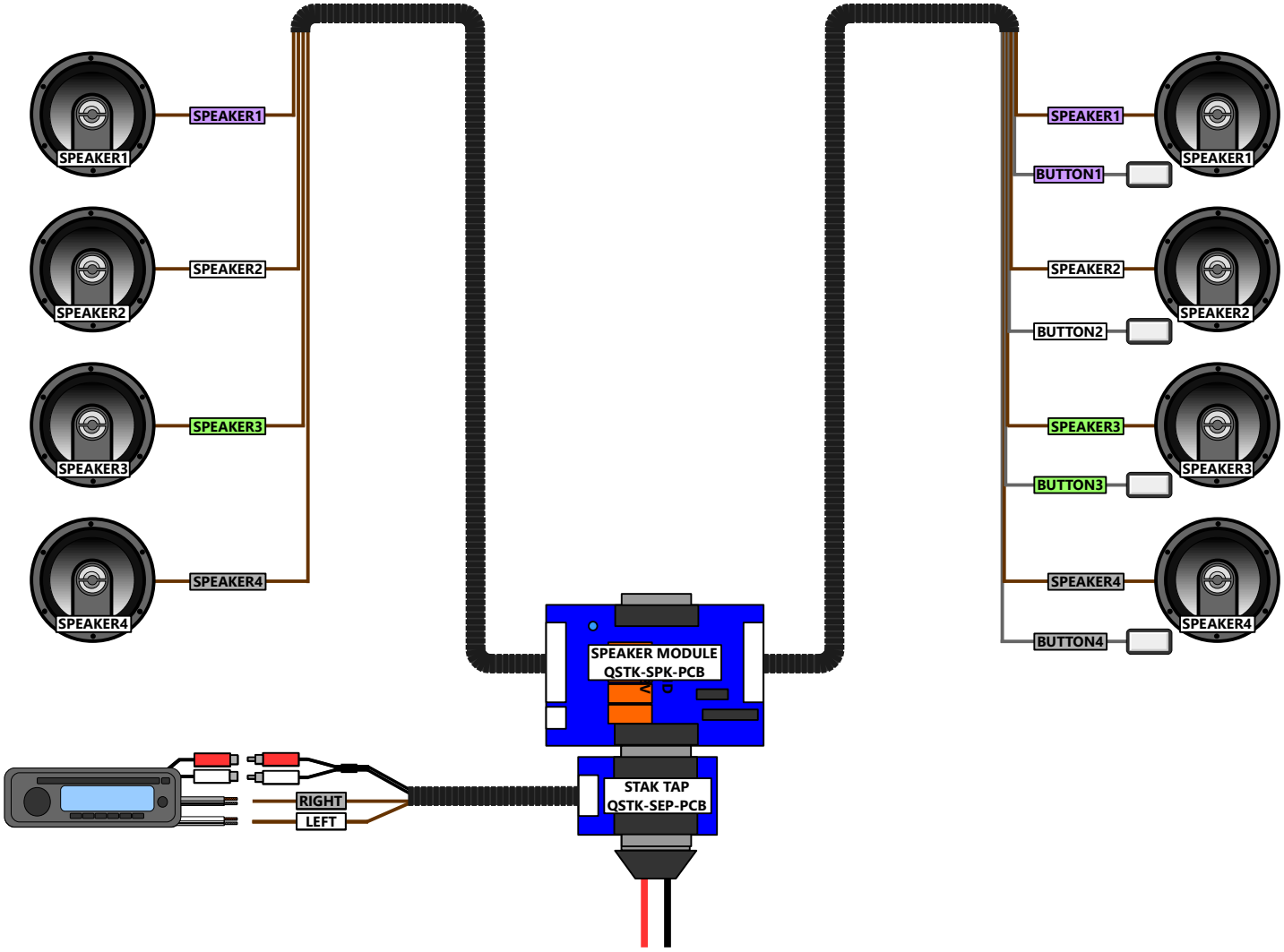

AudioStak INTERACTIVE

4-SPEAKER DISPLAY QUICKSTAK WIRING DIAGRAM