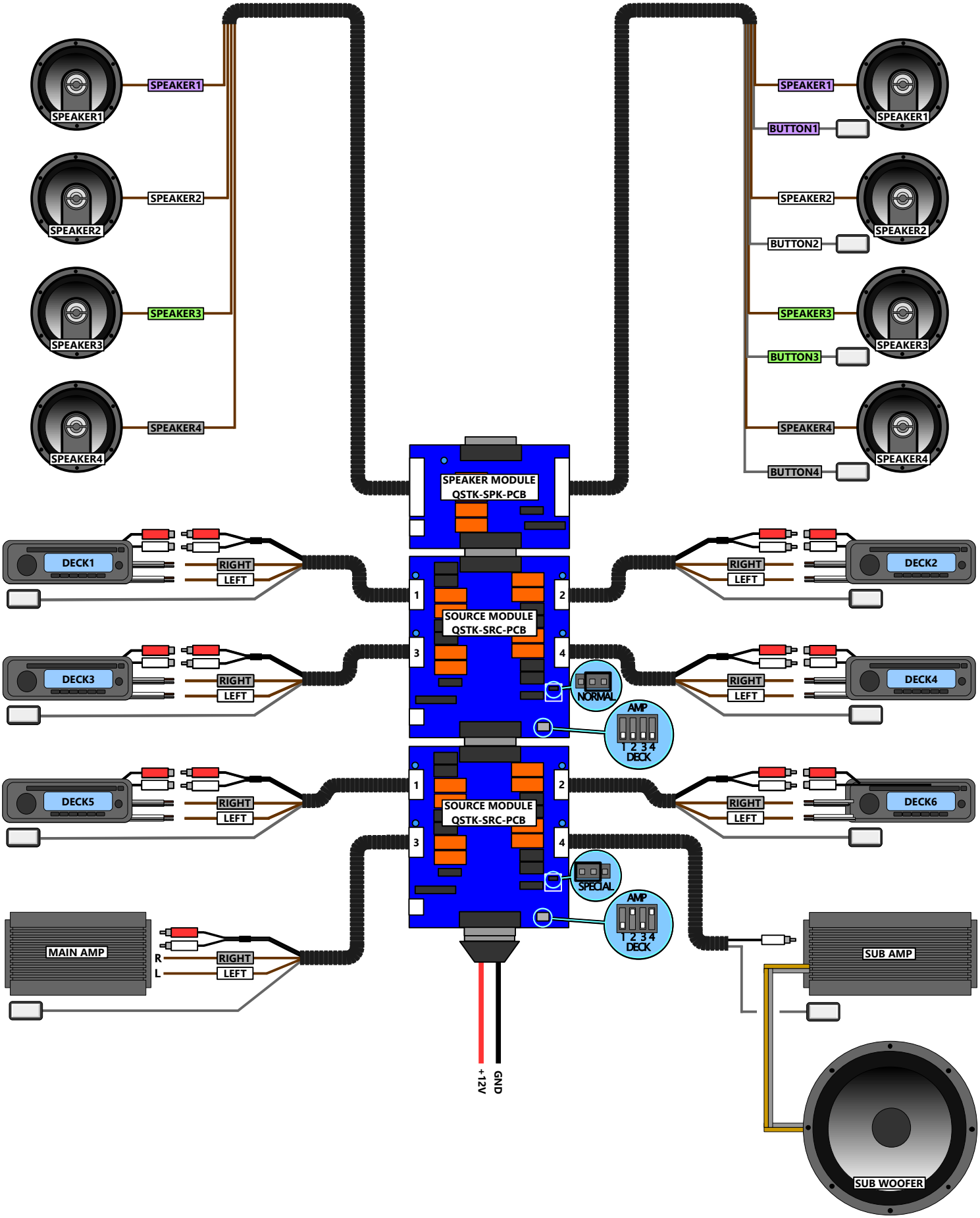

AudioStak INTERACTIVE

SPECIAL DISPLAY QUICKSTAK WIRING DIAGRAM